Altech Corp.®

Your Source for Automation & Control Components

Quality System™
Quality Endorsed Company

Harsh Environment Capability

Unique Air Ventilation System

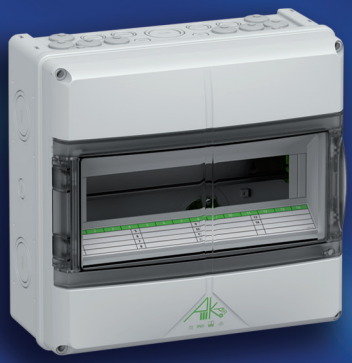

spelsberg

INDUSTRIAL ENCLOSURES

GEOS & AKIII Series

The Intelligent Air Ventilation System

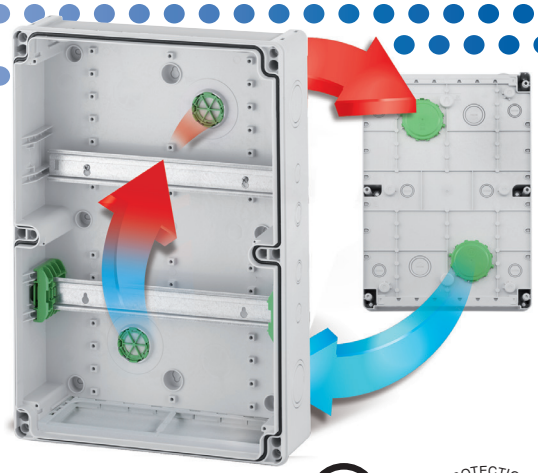

The **patented Air Ventilation elements** avoid condensate water while preserving the high protection class IP65. Occurring condensate is transported out of the enclosure immediately via air exchange.

The continuous and high air exchange allows the interior air to mix constantly with the environmental air and transports the moisture outward.

Even environments with nearly constant humidity and temperature possess air exchange, since the air on the interior of the enclosure warms due to the fittings. The individual components of the ventilation elements mainly consist of the rotating cover (rear side of box) and the 10µm filter element integrated on the inside of the box.

c UL us
E254144
UL TYPE 3R, 12, 12K

PROTECTION IP65

Advantages of Air ventilation elements

- Prevention of condensate water while preserving the high protection class IP65
- High air exchange rate
- 100% pressure compensation
- Foreign object protection
- Maintenance-free

Patent No.
WO 2015/063057 A1

Similar part sold separately for use in other enclosure series, see page 34.

WINNER
iF DESIGN AWARD

Combination flange / flange end wall (sold separately, see page 33)

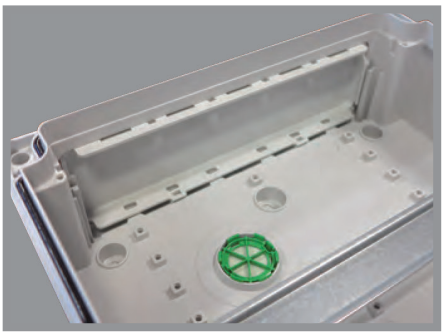

Insert the flange from the outside.

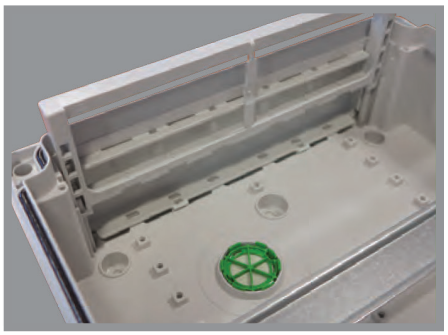

Insert the flange connector into the side guide rails and push down.

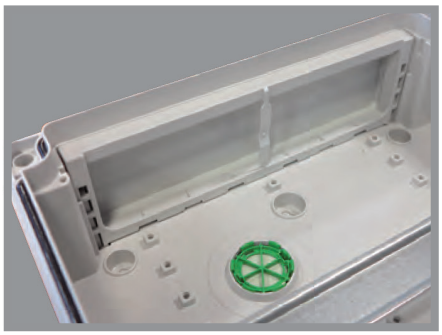

The locking mechanisms grip into the flange and the flange connector latches in place.

Integrated Air ventilation elements

Prevention of condensate water
while preserving protection class IP65

Top/bottom ends

Top/bottom ends supplied open and are closed
with flange system end walls (see page 8)

Height-adjustable mounting rail

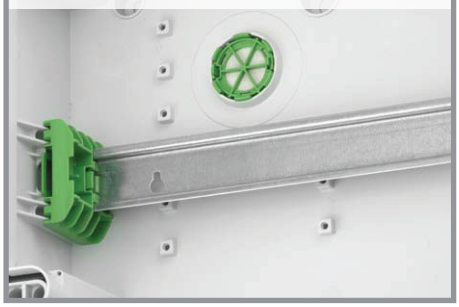

For installation devices sizes 1 to 3
and special designs

150 mm rail spacing

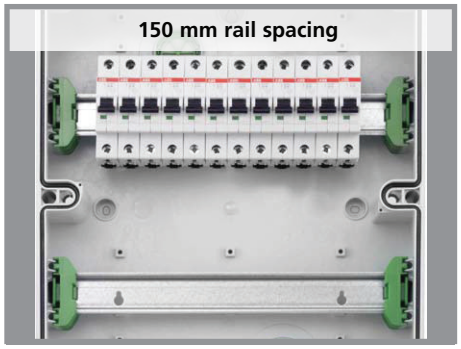

Offers plenty of space for wiring

Optimized hinged window

With ergonomically shaped grips for simple opening.
Hinge side easily changed.

Combinable

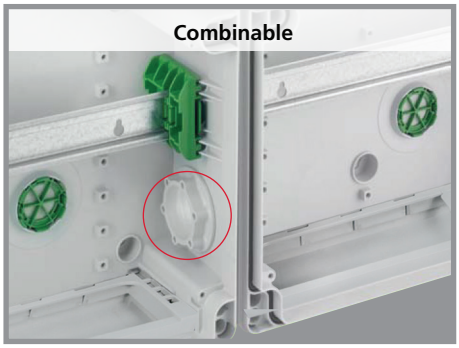

Easily lateral combination via optional M50
combination connectors

Optional exterior installation

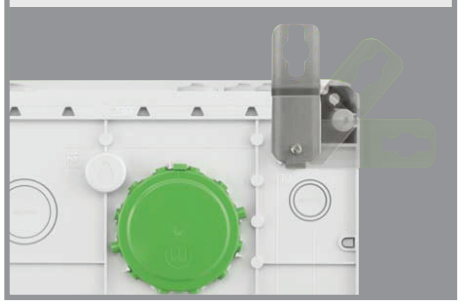

Installation via external mounting tabs

New installation option

Installation outside of sealing area suitable for systems
featuring a maximum measured insulation voltage
of 1,000V AC / 1,500V DC

Three-point installation

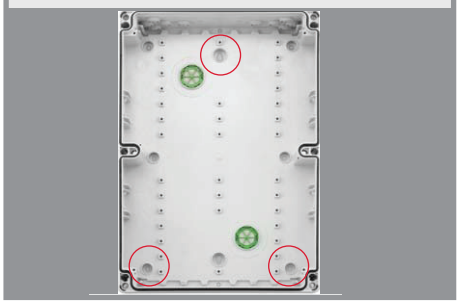

Easy installation via keyhole mounting

DLG focus test: Ammonia resistance

Resistance against stable/barn air for minimum 20 years

Indoor and outdoor installation

One distribution board for every application

Free of halogen, PVC and silicone

Highly flame-retardant

Altech Corp.® • 35 Royal Road • Flemington, NJ 08822-6000 • Phone 908.806.9400 • Fax 908.806.9490 • www.altechcorp.com

Cat No. 733-514

AK-F 14

Knockouts on each side:
2x M40/50
1x M20

Rear Knockouts:
2x M32/40
4x M20/25

Description

Distribution box - Industrial Quality -, flange type, with open top and bottom, for use with various flanges or to combine multiple AK-F - distribution boxes with combination flange, 1 row, 14 modules with pre-installed height adjustable DIN rail. Integrated ventilation elements included to reduce condensation. Labeling strips included.

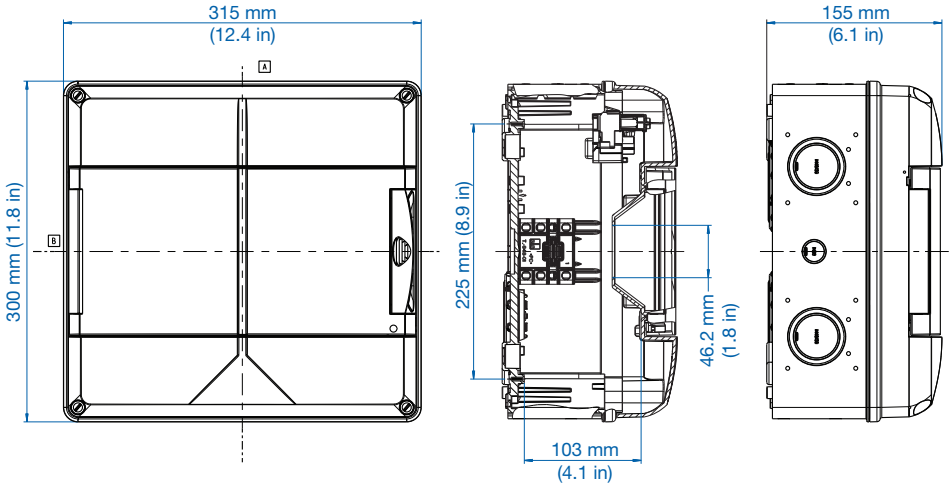

315 x 300 x 155 mm
(12.4 x 11.8 x 6.1 in)

E254144
UL TYPE 3R, 12, 12K

EU

PROTECTION IP65

Flange end walls sold separately see page 33.

Cat No. 733-528

AK-F 28

Knockouts on each side:
2 x M40/50
2 x M20/25
2 x M20

Rear Knockouts:
2 x M32/40
6 x M20/25

Description

Distribution box - Industrial Quality -, flange type, with open top and bottom, for use with various flanges or to combine multiple AK-F - distribution boxes with combination flange, 2 rows, 28 modules with pre-installed height adjustable DIN rails. Integrated ventilation elements included to reduce condensation. Labeling strips included.

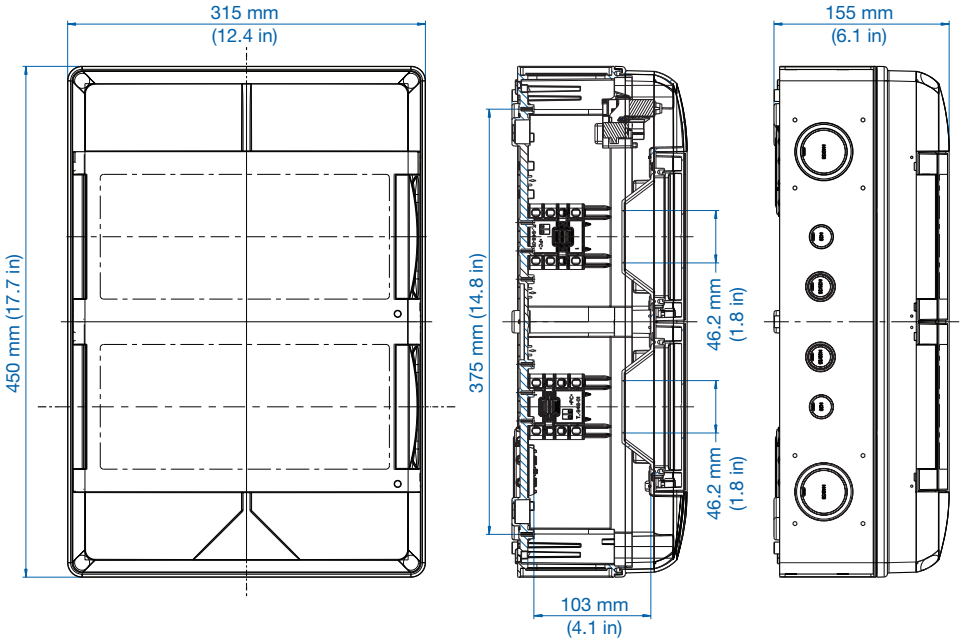

315 x 450 x 155 mm
(12.4 x 17.7 x 6.1 in)

E254144
UL TYPE 3R, 12, 12K

EU

PROTECTION IP65

Flange end walls sold separately see page 33.

Cat No. 733-542

AK-F 42

Knockouts on each side:
2 x M40/50
4 x M20/25
3 x M20

Rear Knockouts:
2 x M32/40
8 x M20/25

Description

Distribution box - Industrial Quality -, flange type, with open top and bottom, for use with various flanges or to combine multiple AK-F - distribution boxes with combination flange, 3 rows, 42 modules with pre-installed height adjustable DIN rails. Integrated ventilation elements included to reduce condensation. Labeling strips included.

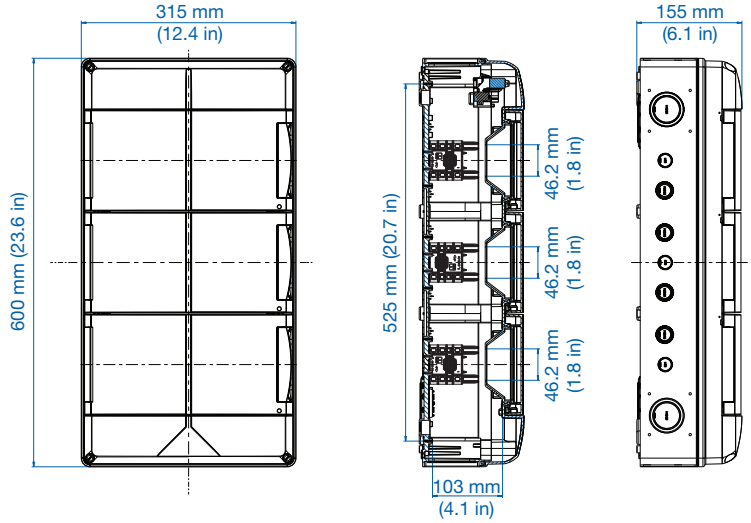

315 x 600 x 155 mm
(12.4 x 23.6 x 6.1 in)

E254144
UL TYPE 3R, 12, 12K

EU

PROTECTION IP65

Flange end walls sold separately see page 33.

Cat No. 733-556

AK-F 56

Knockouts on each side:
2 x M40/50
6 x M20/25
4 x M20

Rear Knockouts:
2 x M32/40
6 x M20/25

Description

Distribution box - Industrial Quality -, flange type, with open top and bottom, for use with various flanges or to combine multiple AK-F - distribution boxes with combination flange, 4 rows, 56 modules with pre-installed height adjustable DIN rails. Integrated ventilation elements included to reduce condensation. Labeling strips included.

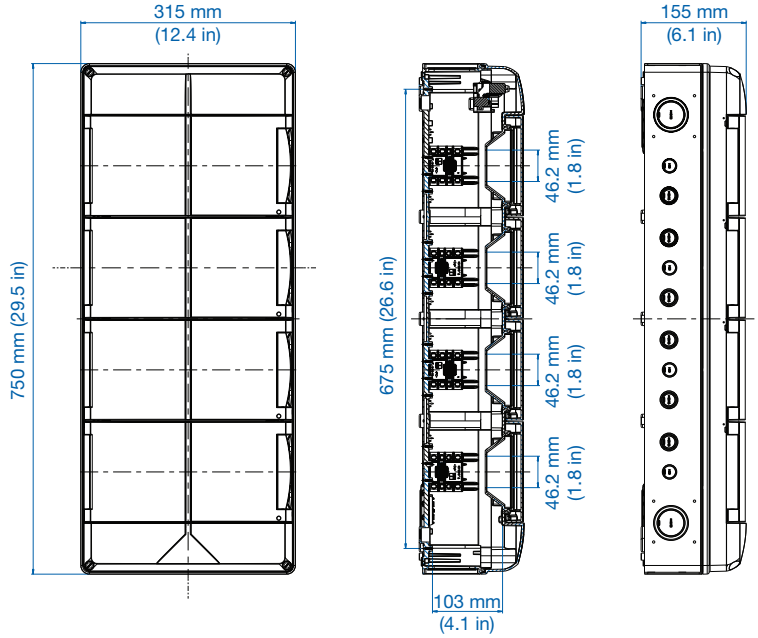

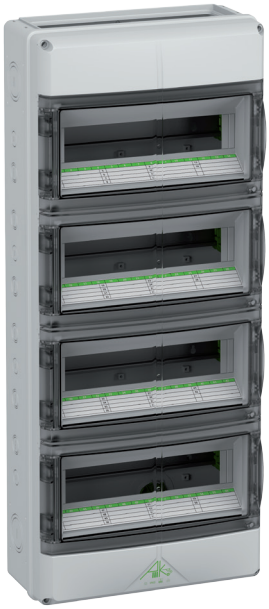

315 x 750 x 155 mm
(12.4 x 29.5 x 6.1 in)

E254144
UL TYPE 3R, 12, 12K

EU

PROTECTION IP65

Flange end walls sold separately see page 33.

Altech Corp.® • 35 Royal Road • Flemington, NJ 08822-6000 • Phone 908.806.9400 • Fax 908.806.9490 • www.altechcorp.com

Cat No. 733-714

AK-F 14 Plus

Knockouts on each side:
2 x M40/50
2 x M20/25
2 x M20

Rear Knockouts:
2 x M32/40
6 x M20/25

Description

Distribution box - Industrial Quality -, flange type, with open top and bottom, for use with various flanges or to combine multiple AK-F - distribution boxes with combination flange, 1 row, 14 modules with pre-installed height adjustable DIN rail. Integrated ventilation elements included to reduce condensation. Labeling strips included. Additional connection space has standard 35 mm DIN rail installed.

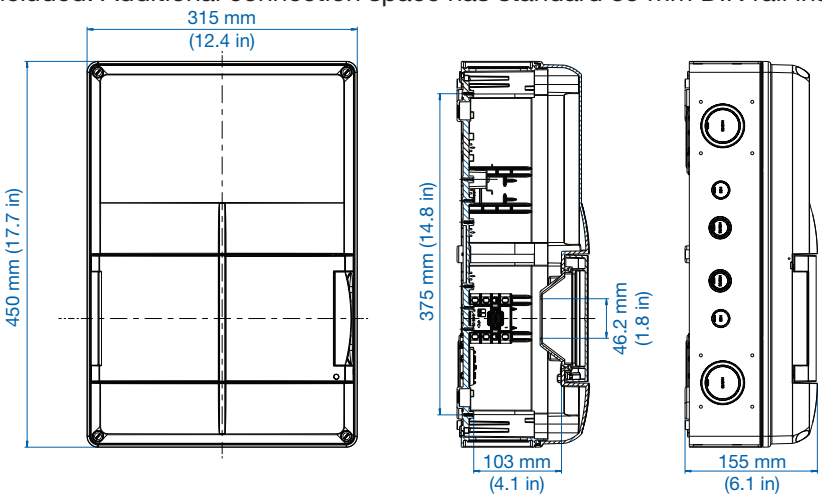

315 x 450 x 155 mm
(12.4 x 17.7 x 6.1 in)

E254144
UL TYPE 3R, 12, 12K

EU

PROTECTION IP65

Flange end walls sold separately see page 33.

Cat No. 733-728

AK-F 28 Plus

Knockouts on each side:
2 x M40/50
4 x M20/25
3 x M20

Rear Knockouts:
2 x M32/40
8 x M20/25

Description

Distribution box - Industrial Quality -, flange type, with open top and bottom, for use with various flanges or to combine multiple AK-F - distribution boxes with combination flange, 2 rows, 28 modules with pre-installed height adjustable DIN rails. Integrated ventilation elements included to reduce condensation. Labeling strips included. Additional connection space has standard 35 mm DIN rail installed.

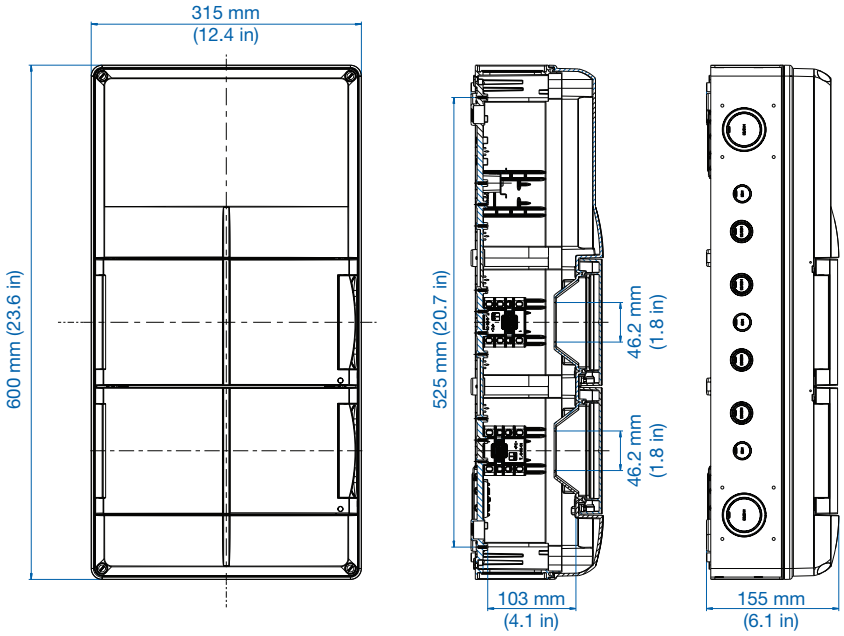

315 x 600 x 155 mm
(12.4 x 23.6 x 6.1 in)

E254144
UL TYPE 3R, 12, 12K

EU

PROTECTION IP65

Flange end walls sold separately see page 33.

Cat No. 733-742

AK-F 42 Plus

Knockouts on each side:
2 x M40/50
6 x M20/25/
4 x M20

Rear Knockouts:
2 x M32/40
10 x M20/25

Description

Distribution box - Industrial Quality -, flange type, with open top and bottom, for use with various flanges or to combine multiple AK-F - distribution boxes with combination flange, 3 rows, 42 modules with pre-installed height adjustable DIN rails. Integrated ventilation elements included to reduce condensation. Labeling strips included. Additional connection space has standard 35 mm DIN rail installed.

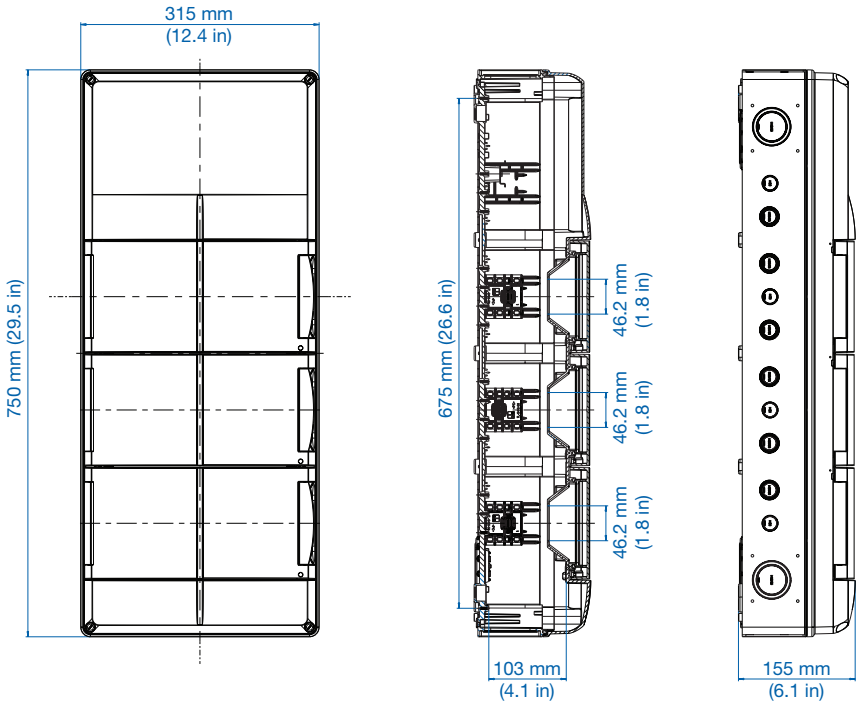

315 x 750 x 155 mm
(12.4 x 29.5 x 6.1 in)

E254144
UL TYPE 3R, 12, 12K

EU

PROTECTION IP65

Flange end walls sold separately see page 33.

Altech Corp.® • 35 Royal Road • Flemington, NJ 08822-6000 • Phone 908.806.9400 • Fax 908.806.9490 • www.altechcorp.com

Flanges / End Walls

All AK-F enclosures must be closed with flanges on the top/bottom end. Altech offers a wide selection of different flanges. Two AK-F enclosures can be combined using the combination flange at the top/bottom end.

Combination flange / flange end wall

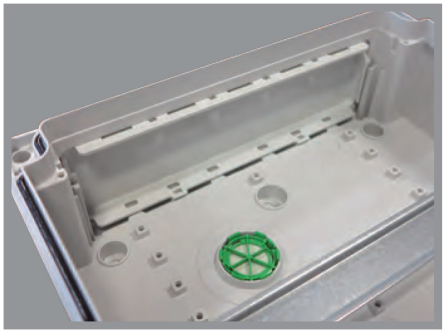

Insert the flange from the outside.

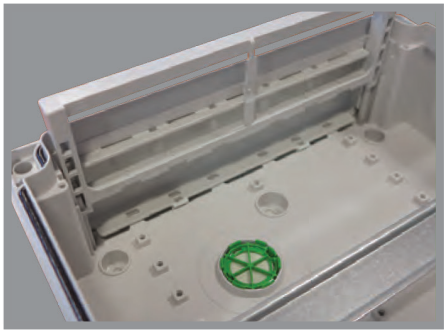

Insert the flange connector into the side guide rails and push down.

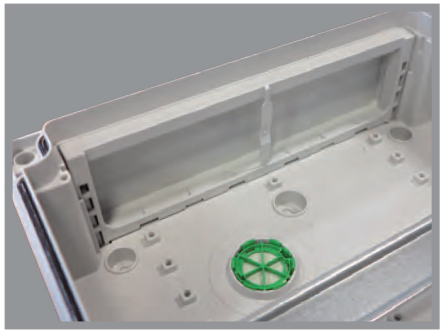

The locking mechanisms grip into the flange and the flange connector latches in place.

Cat No. 733-820

AK3 FL00

Description

Enclosure wall including flange connector for sealing the top or bottom of AK-F enclosures, without knockouts.

Cat No. 733-821

AK3 FL01

Description

Enclosure wall including flange connector for sealing the top or bottom of AK-F enclosures, with knockouts: 1 x M50/M40, 2 x M40/32, 2 x M20.

Cat No. 733-822

AK3 FL02

Description

Enclosure wall including flange connector for sealing the top or bottom of AK-F enclosures, with knockouts: 5 x M25/M20, 4 x M20, 2 x M16.

Cat No. 733-829

AK3 KFL

Description

Combination flange including flange connector for the top or bottom connection to combine two AK-F enclosures.

Other Accessories

Cat No. 733-831

AK3 KBL

Description

Cable cover for the attachment to AK-F 14/28/42/56 housings, as well as Plus types. Can be retroactively mounted on the end.

Cat No. 733-833

AK3 ABL-ES

Description

Stainless steel external mounting tabs, suitable for enclosure AK-F 14/28/42/56, as well as Plus types, 1 set= 4 pcs.

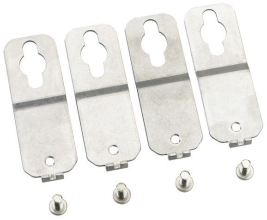

Cat No. 733-830

AK3 KS MSO

Description

Combination gland M50 for the lateral connection of housings AK-F 14/28/42/56, as well as Plus types.

Cat No. 733-812

AK3 NS35-14

Description

Standard DIN rail 35 x 7.5 mm, including height adjustable DIN rail mount for all AK -F 14/28/42/56, as well as Plus types.

Cat No. 733-813

AK3 NS35-275

Description

DIN rail 35 x 7.5 mm, length 275 mm, including universal floor fixing mounts for all AK-F 14/28/42/56, as well as Plus types.

Cat No. 733-832

AK31 TW

Description

Divider made of plastic, suitable for the interior subdivision of AK-F 14/28/42/56 housings, as well as Plus types, with knockouts for cables.

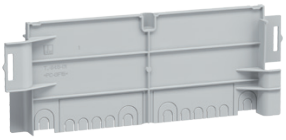

Cat No. 263-440

BEL AIR M40

Description

Air Ventilation elements for use in enclosures without vent system.
Mounts in M40 knockout. Set of 2.

Altech Corp.® • 35 Royal Road • Flemington, NJ 08822-6000 • Phone 908.806.9400 • Fax 908.806.9490 • www.altechcorp.com